BUNN®

ITEM#

PROJECT

DATE

12 Cup Automatic Coffee Brewer with 2 Warmers

Model OL
(2 warmers)
(decanters sold separately)
Dimensions: 23.5” H x 12” W x 18.5” D

Features

12 Cup Automatic Coffee Brewer

- Brews 5.1 to 7.5 gallons (19.3 to 28.4 litres) of perfect coffee per hour.
- All stainless steel construction.
- Can also be operated as a pourover unit.
- Designed to function well in low or uneven water pressure situations.
- Faucet kit available.
- SplashGard® funnel deflects hot liquids away from the hand.

For current specification sheets and other information, go to *www.bunn.com*.

Related Products

Easy Clear® EQ-17-TL
Product No. : 30200.1000
Dimensions:
12 7/16" H x 2 1/2" W x 3" D
31.6 cm H x 6.35 cm W x 7.62 cm D

Easy Clear® ED-17-TL
Product No. : 30201.1001
Dimensions: 8 1/4" H x 2 5/16" Dia.
20.95 cm H x 5.87 cm Dia.

Paper Filter Pack
Product No. : 20115.0000
Packed per case: 1,000
Dimensions: 4 1/4" Base x 2 3/4" Sidewall
10.8 cm Base x 6.98 cm Sidewall

Easy Pour® black decanter
Product No. : 06100.0101
Quantity: 1 *(also packaged in quantities of 2, 3, 6, 12, & 24)*

Easy Pour® orange decanter (for decaf)
Product No. : 06101.0101
Quantity: 1 *(also packaged in quantities of 2, 3, 6, 12, & 24)*

1GPR SS Portable Server on an RWS1 Warmer
1GPR Product No. : 12487.0001*
RWS1 Product No. : 12203.0010
**Also available with side handles or black decor.*

Model	Agency Listing
OL20	UL NSF
OL35	UL NSF

DOSZE EQUIPMENT
WWW.DOSZE.COM.CO

Dimensions & Specifications

Model	Product #	Volts	Amps	Tank Heater Watts	Total Watts	Brewing Capacity	Cu. Ft.	Shipping Weight	Cord Attached
OL 20	20820.0001	120	17	1800	2050	5.1 gal./hr.	4.9	34 lbs.	No
OL 35	20820.0002	120/240	16.6	3500	3750	7.5 gal./hr.	4.9	34 lbs.	No

Brewing capacity: *based upon incoming water temp of 60ºF (140ºF rise) per 1/2 gallon brew time of 4 minutes.*
Models listed as 120/208V or 120/240V must be connected to 208V or 240V electrical service respectively. Please refer to the installation manual.
**Power cord (NEMA 5-15P) 15 Amp-120V machine only.*

Electrical: OL 20 requires 2-wires plus ground service rated 120V, single phase, 60Hz.
OL 35 requires 3-wires plus ground service rated 120/208 or 120/240V, single phase, 60Hz.

Plumbing: 10-90 psi (138-621 kPa). Supplied with ¼" male flare fitting.

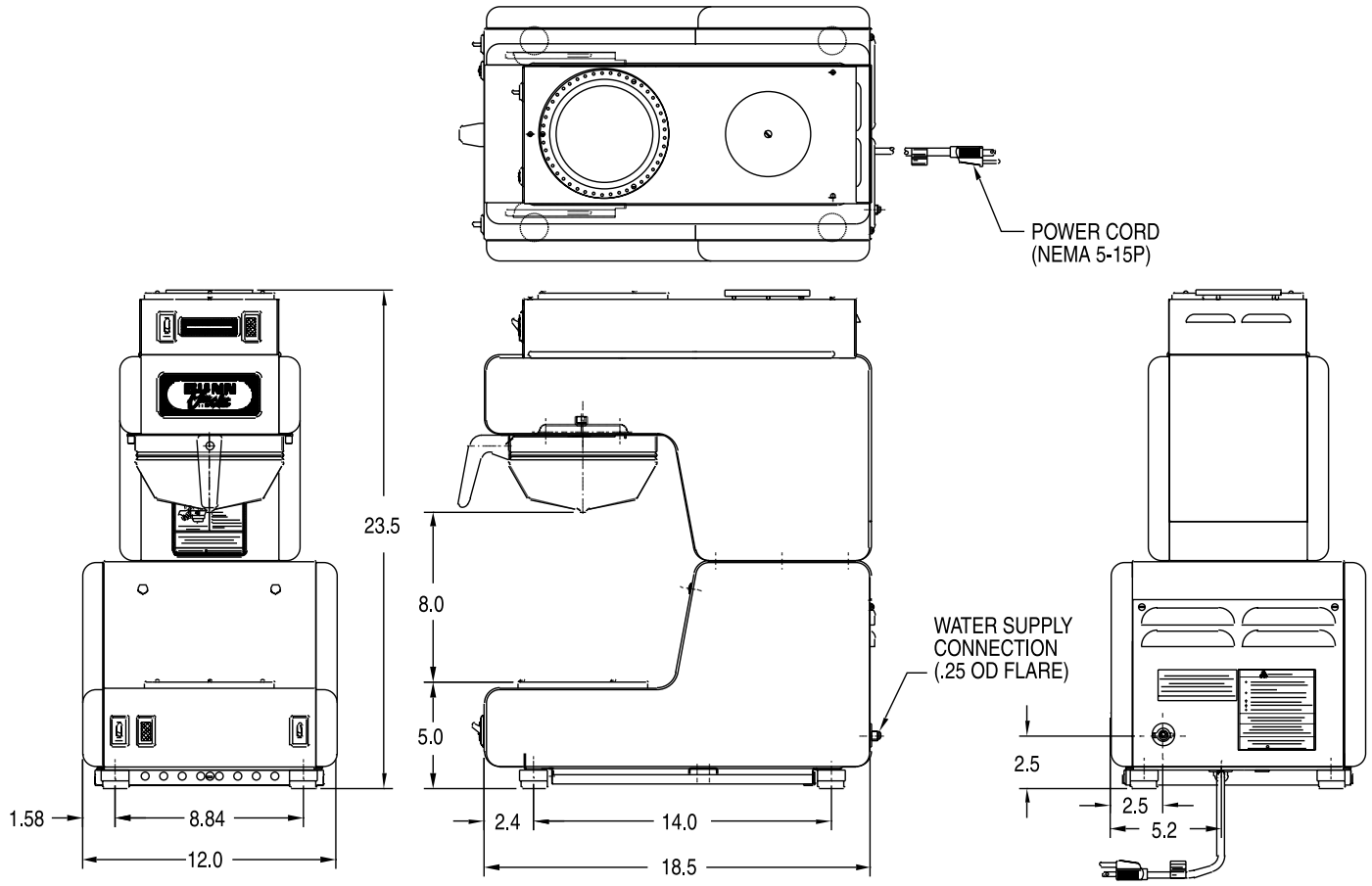

DOSZE EQUIPMENT
WWW.DOSZE.COM.CO

Bunn-O-Matic® Corporation - 1400 Stevenson Drive Springfield, Illinois 62703 • 800-637-8606 • 217-529-6601 • Fax 217-529-6644

BUNN® practices continuous product research and improvement. We reserve the right to change specifications and product design without notice. Such revisions do not entitle the buyer to corresponding changes, improvements, additions or replacements for previously purchased equipment.

All dimensions shown in inches. *Bunn-O-Matic Corporation owns all copyrights relating to materials in this publication. Please contact BUNN to request permission to reproduce any portion of this publication.*